MarForm

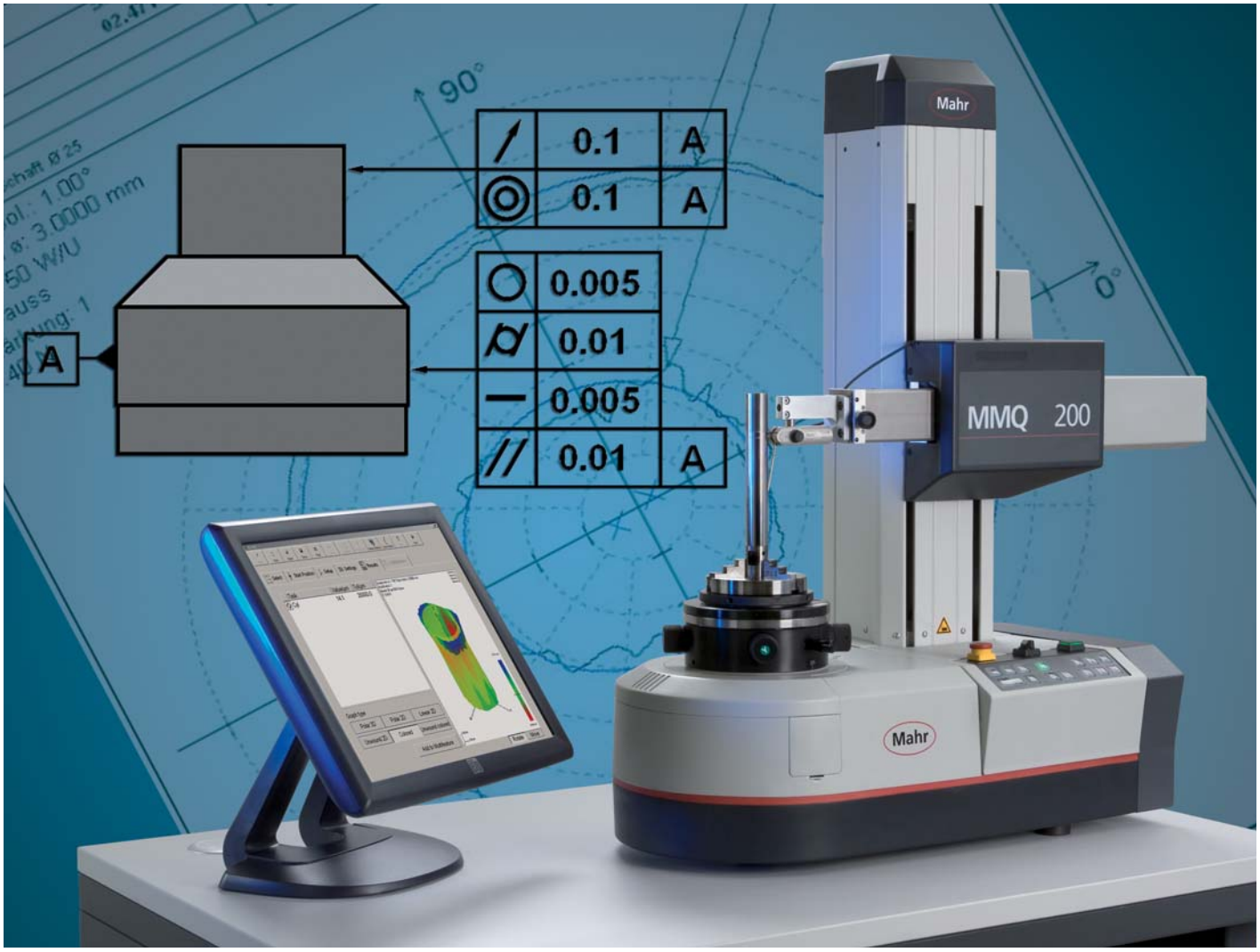

NEW: MarForm MMQ 200 Cylindricity

- 0 +

Mahr

EXACTLY

► | Automatic measuring machine for testing deviations of form and position

- For use in the production area or in the measuring room
- Quick and easy handling
- High measuring accuracy, optimized for cylindricity
- Minimizes scrap, saves time and reduces production costs

| ◄

MarForm MMQ 200

Description

For proving the quality of your products, the MarForm MMQ 200 assesses the deviations of form and position as per DIN/ISO 1101 and documents them. Among these are:

- Roundness
- Straightness
- Flatness (from a polar trace)
- Parallelism
- Conicity
- Concentricity, coaxiality
- Run-out, total run-out
- Cylindricity
- Taper
- Perpendicularity (from a polar trace)
- Angularity
- Angle sector (roundness, flatness, run-out)
- Straightness evaluation sections

Features
- High-precision measuring axis polar (C)
- Motorized measuring axis, vertical (Z)
- Motorized positioning axis, horizontal (X)
- Manual centring and tilting table
- Manual probe T20W
- Ergonomical operator panel; special measuring programs can be started by pressing the keys (P1, P2, P3)

Your advantages
- Immediately recognize production errors
- Minimize rework and scrap
- Document product quality
- Immediate use due to easy handling
- For production areas and measuring rooms

The complete solution
Mahr delivers the complete solution for your measuring task.
- Competent technical advice, feasability test on the intended scope of workpieces
- After-sales services: creation of measuring programs, and support for doing so, maintenance contracts, software maintenance contract, DKD calibration services, metrology and application training.
- One source for competence: production and development have both been in the same location for over 100 years.

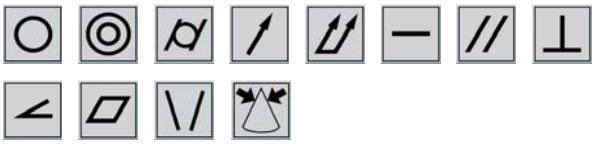

Delivery scope

Standard delivery scope of "Measuring Station"
Order no. 5440750
- MarForm MMQ 200
- Probe T20W with probe arm
- Easy Form measuring, control and evaluation software
- PC with processors of the latest generation, Windows XP Professional
- 19" TFT monitor
- Color ink jet printer
- Connection cable

Options and accessories

- 17" TFT touchscreen monitor
- AdvancedForm Software (more functions and teach-in programming)
- Various clamping fixtures
- Probe arms with different lengths and probe ball geometries.
- Various calibration standards

MarForm MMQ 200

Software EasyForm 3.0

The EasyForm measuring, control and evaluation software is very simple to operate and does not require any programming knowledge. Consequently, your staff and your operating costs will profit from the minimum number of steps required to attain a record. For a roundess record just two steps are required. And the software guides you through every setting.

The EasyForm software remembers every step you made. Whether you would like to repeat the last measurements or if you decide to combine different measurements and evaluations of a workpiece to a "multifeature": The EasyForm teach-in mode will learn the steps. You can save up to 32 different measuring tasks under one of the programmable function keys.

The EasyForm software is based on the optimized MarWin measuring and evaluation routines and can be combined with other MarWin modules. It runs under Windows® XP Professional and includes functions for user administration, network support, for saving records to files; it can be extended with future options. EasyForm is the easiest way to operatre a formtester.

- Prepositioning and parameter entry
- Measuring programs can be called up using function keys
- Random features in random order
- In addition to polar and linear profiles, helix and spiral profiles are also possible
- Functions for data processing, such as, for example, FFT and interactive exclusion of profile sections
- Customized measuring records including result charts and graphics
- 3D representation
- The records can be saved as, for example, PDF files
- Data export to, among others, QS-STAT (option) or text files

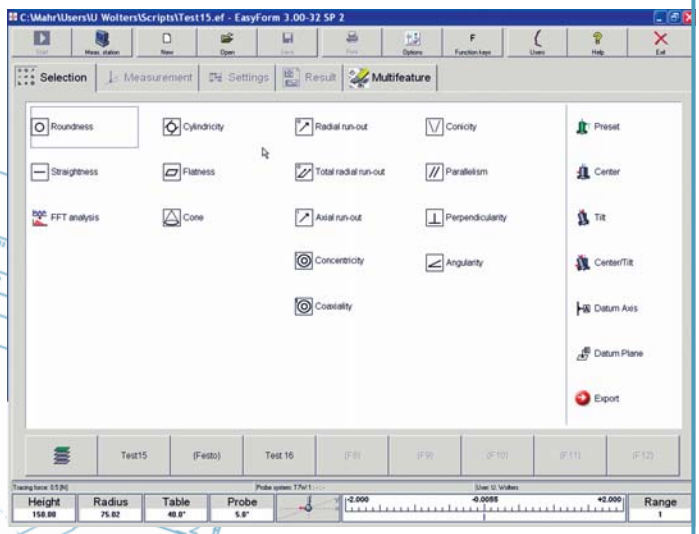

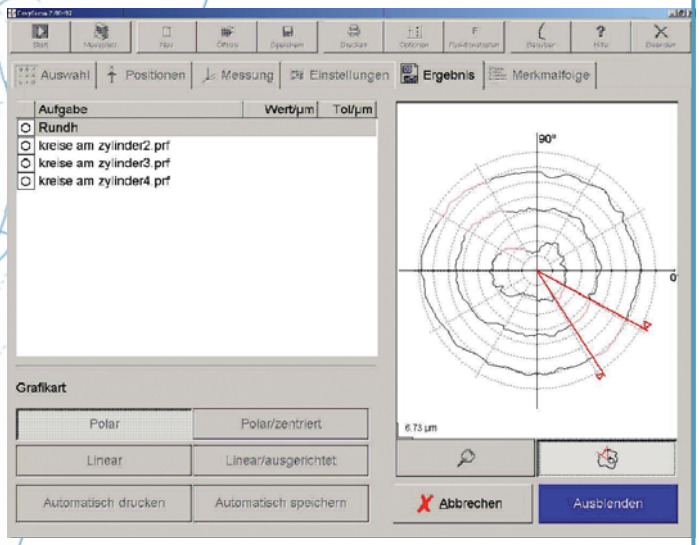

Touchscreen monitor

EasyForm offers the possibility to operate either a normal TFT monitor or a touchscreen monitor, for which neither a keyboard nor a mouse is required. This is a useful alternative especially for use in production areas.

Features

- Intuitive user interface for immediate measurements
- Interactive creation of programs
- 3D representation of cylindricity, flatness and total run-out - in color and also with grid lines; creation in interactive graphic preview mode
- Immediate representation of the measuring results on the monitor
- Concise measuring records on the monitor, as a file (also in the network) or on paper (any Windows printer)
- Operating system: Windows® XP.

MarForm MMQ 200

Probe T20W

Probe T20W for MMQ 200

Order no. **5400152**

- Inductive probe
- Adjustable probe arm angle +/- 95° (190°)
- Measuring range ± 1000 µm
- Adjustable measuring force
- Adjustable measuring direction
- Free travel limitation can be adjusted in measuring direction

Incl. probe arm 5400160 (see below), complete in a box. Included in delivery scope of measuring station 9999485.

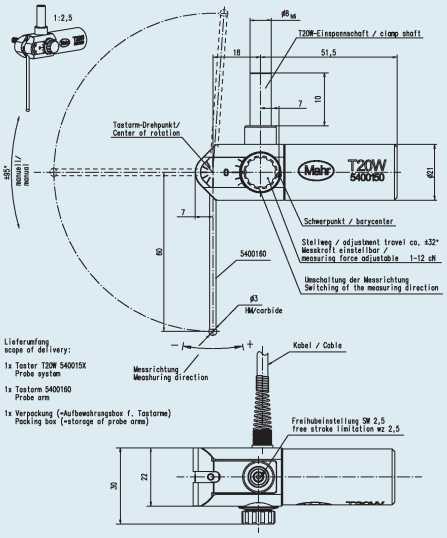

Technical data

Roundness measuring device, C-axis	
Run-out deviation (µm+µm/mm measuring height)**	0.03 + 0.0006
Roundness deviation (µm+µm/mm measuring height)*	0.015 + 0.0003
Run-out error, axia (µm+µm/mm measuring radius)**	0.04 + 0.0006
Roundness deviation (µm+µm/mm measuring radius)*	0.02 + 0.0003
Centring and tilting table	
Coarse and fine adjustment	manual
Table diameter	160 mm
Table capacity, centric	200 N
Rotary encoder (50 Hz / 60 Hz)	1 – 20 (1/min)
Vertical unit, Z axis	
Measuring path, motorized	250 mm
Straightness deviation/100mm **	0.15 µm
Straightness deviation, overall **	0.3 µm
Parallelism deviation, Z/C axis	0.5 µm
Measuring speed	0.5 - 20 mm/s
Positioning speed	0.5 - 100 mm/s ?
Horizontal unit, X-axis	
Positioning path, motorized	150 mm
Positioning speed	0.5 – 30 mm/s
Measuring volume	
Testing diameter up to	230 mm
Measuring height up to	380 mm
Distance C/Z axis	218 mm
Dimensions, weight	
Length	803 mm
Width	388 mm
Height	883 mm
Weight	approx. 120 kg
Connection data	
Voltage	100 V up to 240 V (50 Hz up to 60 Hz)
Power consumption	180 VA
Data connection to PC	USB 2.0 high speed
Location conditions	
Ambient temperature	20°C ± 1K
Humidity	40% - 70% rel. hum.

* Values as maximum deviation from reference circle LSC, at 20 °C ±1 °C in oscillation-neutral environment, filter 15 upr at 5 rpm and with standard probe arm with ball ø 3 mm (0.12").

** All values as per DIN ISO 1101 at 20 °C ±1 °C in oscillation-neutral environment, filter: 15 upr LSC or 2.5 mm. LSS; speed: 5 rpm or 5 mm/s (0.2"/s) and standard probe arm with ball ø 3 mm (0.12").

Tested on a standard using compensation algorithms.

Mahr GmbH Göttingen
P.O. Box 1853, D-37008 Göttingen
Carl-Mahr-Straße 1, D-37073 Göttingen
Phone + 49 551 7073-0, Fax +49 0551-71021, eMail: info@mahr.de
www.mahr.com

3759701-11.09.2008